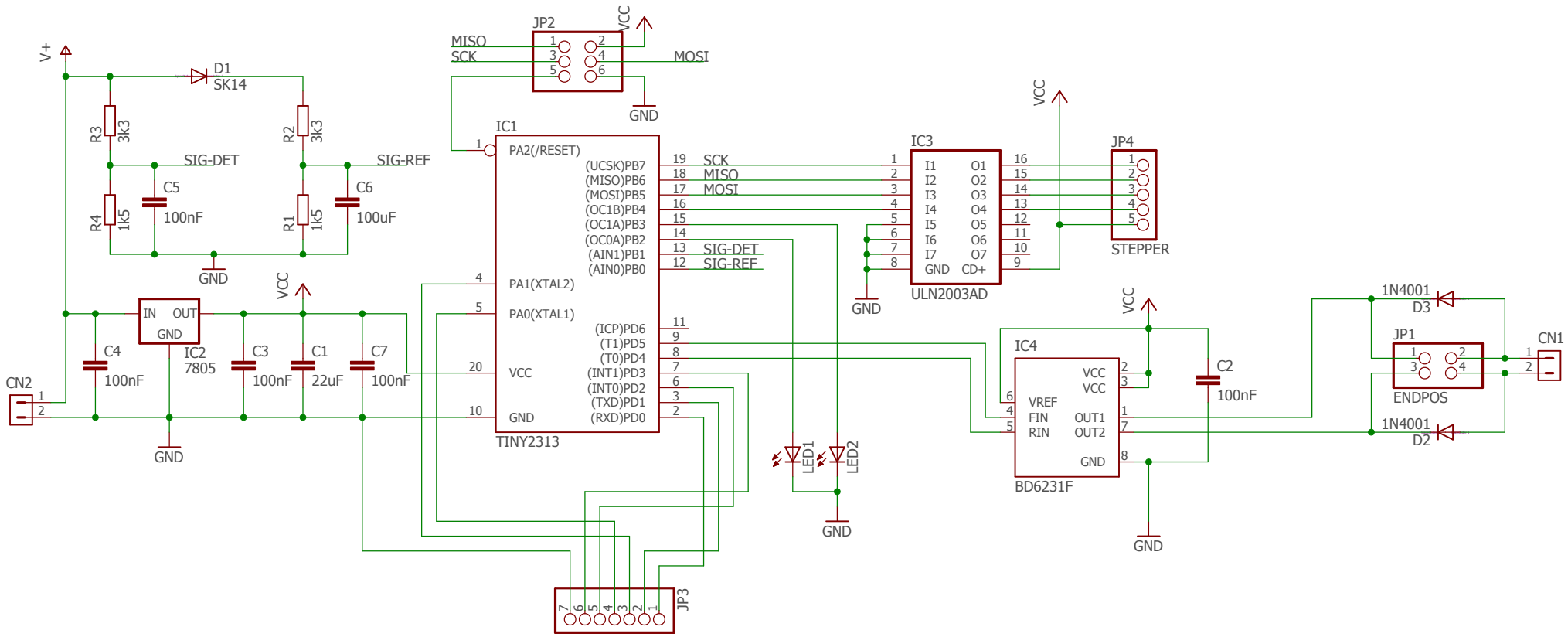
V+
D1
SK14
R3
3k3
R2
3k3
SIG-DET
SIG-REF
C5
100nF
C6
100uF
R4
1k5
R1
1k5
GND
VCC
IN
OUT
GND
IC2
7805
C4
100nF
C3
100nF
C1
22uF
C7
100nF
CN2
JP2
MISO
SCK
MOSI
IC1
PA2(/RESET)
(UCSK)PB7
(MISO)PB6
(MOSI)PB5
(OC1B)PB4
(OC1A)PB3
(OC0A)PB2
(AIN1)PB1
(AIN0)PB0
PA1(XTAL2)
PA0(XTAL1)
(ICP)PD6
(T1)PD5
(T0)PD4
(INT1)PD3
(INT0)PD2
(TXD)PD1
(RXD)PD0
TINY2313
IC3
I1
I2
I3
I4
I5
I6
I7
GND
O1
O2
O3
O4
O5
O6
O7
CD+
ULN2003AD
JP4
STEPPER
LED1
LED2
JP3
IC4
VREF
FIN
RIN
VCC
VCC
OUT1
OUT2
GND
BD6231F
C2
100nF
1N4001
D3
1N4001
D2
JP1
ENDPOS
CN1