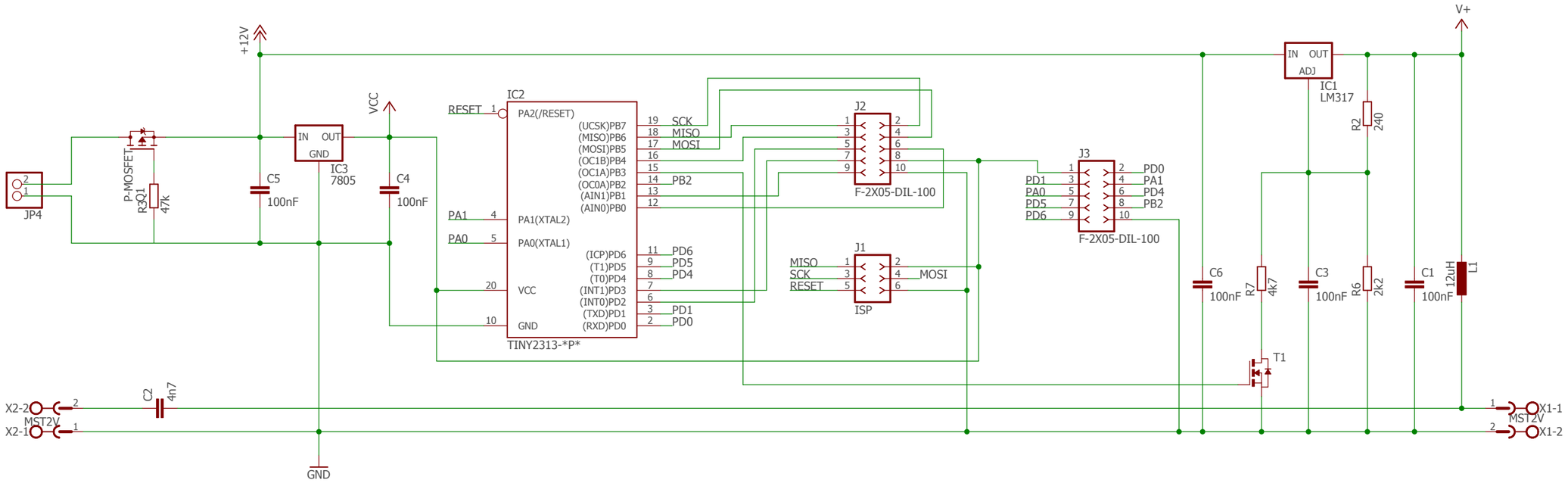
+12V
V+
VCC
GND
JP4
P-MOSFET
Q1
R3
47k
C5
100nF
IN OUT
GND
IC3
7805
C4
100nF
IC2
RESET
PA2(/RESET)
(UCSK)PB7
(MISO)PB6
(MOSI)PB5
(OC1B)PB4
(OC1A)PB3
(OC0A)PB2
(AIN1)PB1
(AIN0)PB0
PA1
PA1(XTAL2)
PA0
PA0(XTAL1)
(ICP)PD6
(T1)PD5
(T0)PD4
VCC
(INT1)PD3
(INT0)PD2
(TXD)PD1
(RXD)PD0
GND
TINY2313-*P*
SCK
MISO
MOSI
PB2
PD6
PD5
PD4
PD1
PD0
J2
F-2X05-DIL-100
J3
F-2X05-DIL-100
PD1
PA0
PD5
PD6
PD0
PA1
PD4
PB2
J1
ISP
MISO
SCK
RESET
MOSI
IN OUT
ADJ
IC1
LM317
R2
240
C6
100nF
R7
4k7
C3
100nF
R6
2k2
C1
100nF
L1
12uH
T1
X2-2
X2-1
MST2V
C2
4n7
X1-1
X1-2
MST2V